LIGHT SOLUTIONS HILUX LED DRIVER · POWERED BY SHELLY

Model 80-870-SH-1050

Constant current LED driver with Wi-Fi and Bluetooth · Push-dim input

Scan to get the Shelly app

POWERED BY Shelly

TECHNICAL DATA

INPUT	
Voltage Un	**220–240 V AC**
Current In	**0.2 A**
Frequency fn	**50 Hz**
Power factor λ	**0.9**
Ambient ta / case tc	**45 °C / 85 °C**
Dimensions	**176 × 40 mm**

OUTPUT	
Voltage Uout	**22–42 V DC**
Current Iout	**1050 mA**
Power Pout	**44 W max**
No-load voltage	**50 V max**
Radio	**Wi-Fi 2.4 GHz, BLE**

INSTALLATION

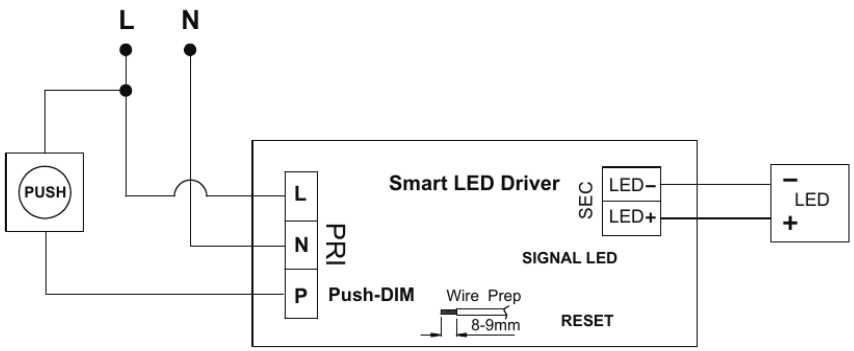

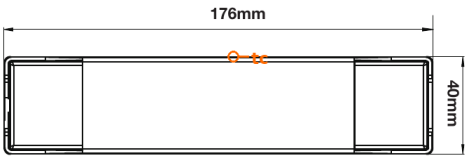

L / N mains 220–240 V AC · **P** momentary push-button (push-dim) · **LED+ / LED–** LED output – observe polarity. Strip wires 8–9 mm.

SYSTEM BUTTON

Network settings reset hold ≈ 5 s

Hold the system button until the LED blinks **200 ms ON / 500 ms OFF**, then release. Wi-Fi and Bluetooth settings are cleared and the device returns to setup mode so it can be configured again.

Factory reset hold ≈ 10 s

Keep holding until the LED blinks faster, **200 ms ON / 300 ms OFF**, then release. All settings are restored to factory defaults.

SYSTEM LED STATES

PATTERN (6 S)	NAME / TIMING	MEANING
	Solid ON Continuously ON	Connected and operating normally – online with Wi-Fi and Shelly Cloud.
	Slow, even blinking 1000 ms ON / 1000 ms OFF	Setup mode. The access point is active and the device is waiting to be added or configured.
	One long blink every few seconds 1000 ms ON / 3000 ms OFF	Trying to connect to Wi-Fi, or no network is currently available.
	One short flash every ~5 s 200 ms ON / 5000 ms OFF	Connected to Wi-Fi but not to Shelly Cloud (e.g. no internet access).
	LED OFF Continuously OFF	The system LED has been disabled in the settings, or the device has no power.
	Fast blinking, short flashes 200 ms ON / 500 ms OFF	Firmware update in progress – do not disconnect the power.
	Fast, even blinking 250 ms ON / 250 ms OFF	Factory reset in progress.

INTENDED USE

- For controlling compatible LED modules only.
- For fixed indoor installation unless otherwise stated.
- Use only within the specified electrical and temperature limits.

DISPOSAL

Do not dispose of the product with household waste. Take it to an approved collection point for electrical and electronic equipment.

SAFETY

Warning: risk of electric shock. Installation must be carried out by a qualified electrician. Disconnect the mains supply and verify isolation before installation.

- Do not install or service the product while energised.
- Do not connect an incompatible LED load.
- Observe the correct LED polarity.
- Ensure adequate ventilation.
- Do not exceed the stated ta or tc temperature.
- Do not cover with insulation unless specifically permitted.
- Do not use the product if damaged.
- Do not open, modify or repair the product.
- The product must be installed inside a suitable enclosure or luminaire.
- Follow applicable national electrical installation regulations.

ELECTRICAL CONNECTION

L / N mains 220–240 V AC · **P** momentary push-button (push-dim) · **LED+ / LED−** LED output – observe polarity. Strip wires 8–9 mm.

Rigid or flexible conductors **0.75–2.5 mm²**, stripped 8–9 mm. Fit ferrules on flexible conductors.

The **tc** point is in the middle of the top of the housing. Measured there, the case temperature must not exceed 85 °C once installed.

Warning: the P (push-dim) terminal carries mains voltage. Route and insulate it like L and N. Use a momentary push-button rated for mains voltage (at least 250 V AC) with a normally-open contact, installed behind a cover. Never connect a bell-push, SELV or other extra-low-voltage button.

The system button only works while the driver is energised. Plan the installation so that the button can be reached in the installed position. If a cover must be opened to reach it, only a qualified electrician may do so, with the driver still securely mounted and all live terminals covered. Never press the button on a driver that has been removed but is still connected to the mains.

LED COMPATIBILITY

✓ **Permitted:** Passive monochrome constant-current LED modules.

✗ **Not permitted:** LED lamps with integrated driver, addressable RGB / RGBW LED strips, halogen lamps, incandescent lamps.

Required LED voltage range	**22–42 V**
Required LED current	**1050 mA**

RADIO	
Bluetooth frequency range	**2402–2480 MHz**
Wi-Fi 2.4 GHz frequency range	**2412–2472 MHz**
Max. RF power, BLE	**1.48 dBm**
Max. RF power, Wi-Fi	**16.3 dBm**

SETUP AND CONTROL

1. **Wire the driver.** With the mains supply switched off, connect L and N, the LED module to LED+ / LED−, and, if used, a push-button to the P terminal.
2. **Switch on the supply.** Restore the mains supply. The system LED then shows the state of the driver.
3. **Get the app.** Scan the QR code and download the Shelly app.
4. **Add and control.** Enable Bluetooth on your mobile device, add the driver in the Shelly app and control the lighting from your phone.

PUSH-BUTTON (P TERMINAL)	FUNCTION
Short press	Switch ON / OFF
Press and hold	Dim up / down. The next long press reverses the dimming direction.

TROUBLESHOOTING

PROBLEM	CHECK
LED does not switch on	Check the cable connections, that the LED voltage matches the driver output, and that the output is switched on in the app.
LED flickers	Check that the driver matches the luminaire (voltage range and current).
Driver overheats	Overheating reduces current and power. Improve ventilation and check ta / tc limits.

EU Declaration of Conformity. Hereby, Light Solutions ApS declares that the radio equipment type 80-870-SH-1050 is in compliance with Directive 2014/53/EU. The full text of the EU Declaration of Conformity is available at www.lightsolutions.dk/wp-content/themes/lightsolutions-theme-final/documents/driver-manuals/80-870-SH_EU_DoC.pdf

Manufacturer: Light Solutions ApS, Michael Drewsens Vej 12, DK-8270 Højbjerg, Denmark · info@lightsolutions.dk · www.lightsolutions.dk